DocuSign Envelope ID: 55B72CA4-E932-41A3-93A1-8786D1C3F684

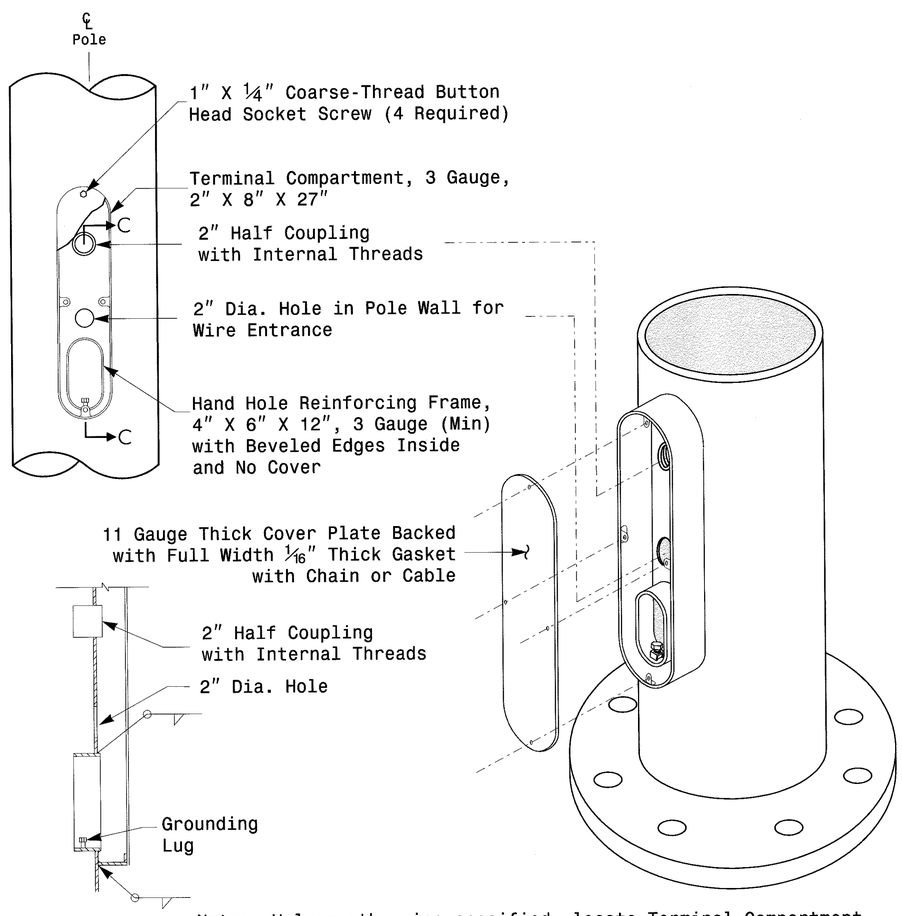

Section C-C

Note: Unless otherwise specified, locate Terminal Compartment 1 foot above the pole base plate at 180 degrees on the pole's radial index.

Terminal Compartment Detail

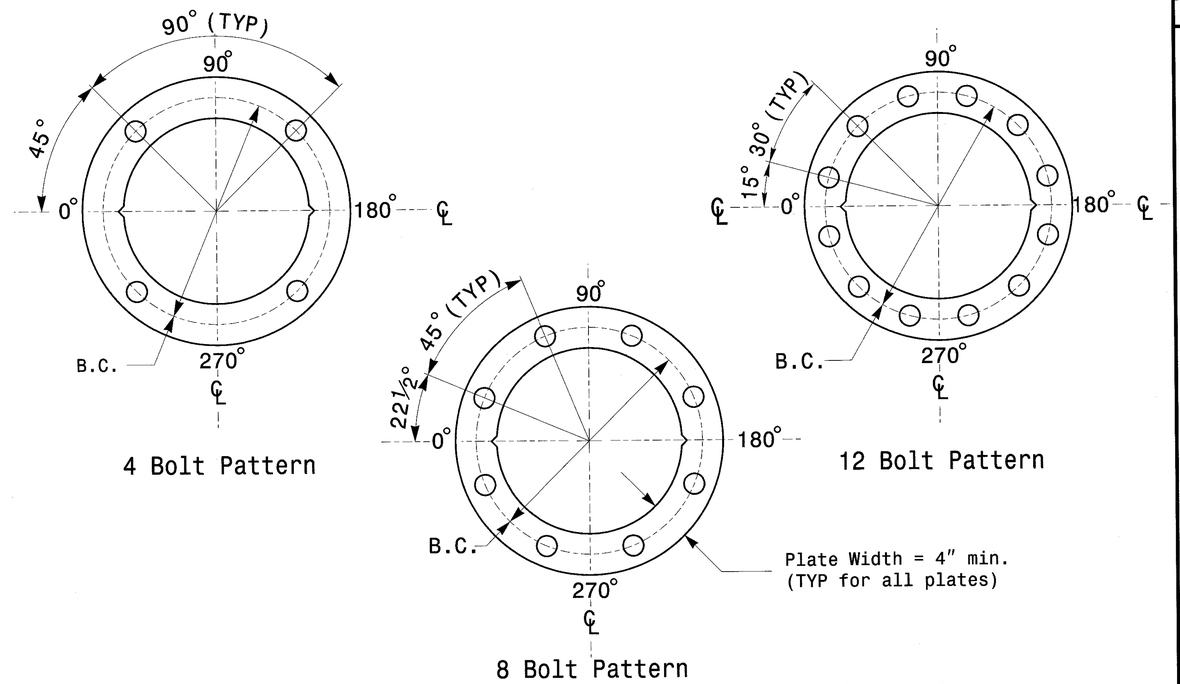

Construct Templates and Plates from ¼" min. thick Steel. Galvanizing is not required.

Base Plate Template and Anchor Bolt Lock Plate Details

Shaft I.D. Tag
(Provide on Strain Poles and Mast Arm Poles)

Arm I.D. Tag
(Provide on each section of a multi-section mast arm)

Notes:
1) D= Diameter, T= Thickness, L= Length, Y= Yield Strength
2) A.B. = Anchor Bolt
3) B.C. = Bolt Circle of Anchor Bolts
4) If Custom Design, use "NCDOT STANDARD" line for pole I.D. number and Signal Inv. Number.
5) See drawing M4 for mounting positions of I.D. tags.

Identification Tag Details

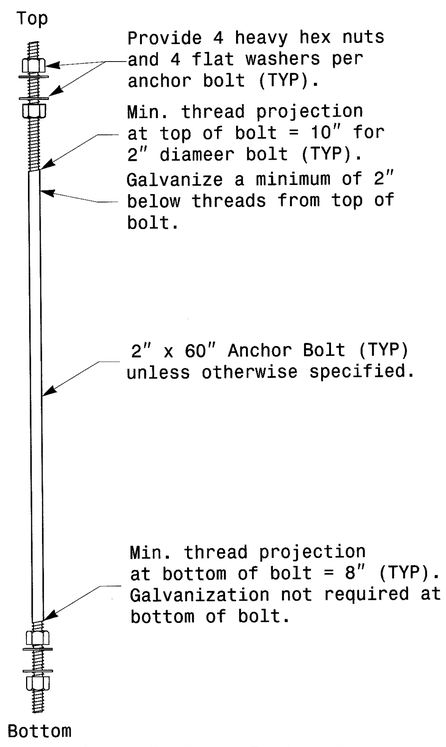

Anchor Bolt Detail

Note: See Strain Pole drawing M3 and Mast arm drawing M4 for base plate weld details.

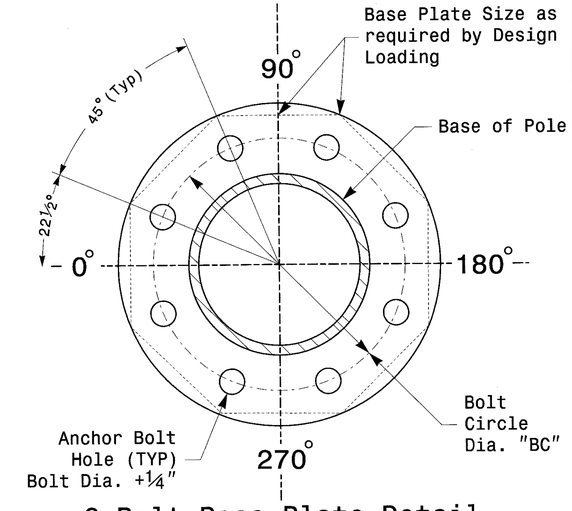

8 Bolt Base Plate Detail

SHEET NO. Sig. M2

Fabrication Details – All Poles

Prepared in the Offices of: Transportation Mobility and Safety Division, Traffic Engineering Branch, Signal Design Section, 750 N.Greenfield Pkwy, Garner, NC 27529

Typical Fabrication Details Common To All Metal Poles

PLAN DATE:	AUGUST 2013	DESIGNED BY:	C.F. ANDREWS
PREPARED BY:	N. BITTING	REVIEWED BY:	D.C. SARKAR

SCALE 0 NA NONE

REVISIONS | INIT. | DATE

SEAL: NORTH CAROLINA PROFESSIONAL SEAL 028094 ENGINEER DEBESH C. SARKAR

DocuSigned by: Debesh C. Sarkar 44EBE32E1427E4C4... 3/11/2014

SIGNATURE | DATE

SIG. INVENTORY NO.

04-MAR-2014 12:50
S:\WTSSGU\TS Signals\Signal Design Section\Eastern Region\M Sheets\2012_MC_Fab Details All Poles.dgn
jgalloway