PROJECT REFERENCE NO.	SHEET NO.
SS-4905BT	SIG. 18

FIBER OPTIC CABLE

INTERSECTION LOCATION
S. ROXBORO ST NEAR RAMSEUR ST
SPLICE CABINET #TE-24

Notes:
Unused fibers left coiled and stored in splice tray.
Unused Buffer Tubes left coiled and stored in splice tray.

LEGEND
X = FUSION SPLICE
C = CAP IN TRAY

COLOR CODE
TIA/EIA 598-A
(1) BLUE
(2) ORANGE
(3) GREEN
(4) BROWN
(5) SLATE
(6) WHITE

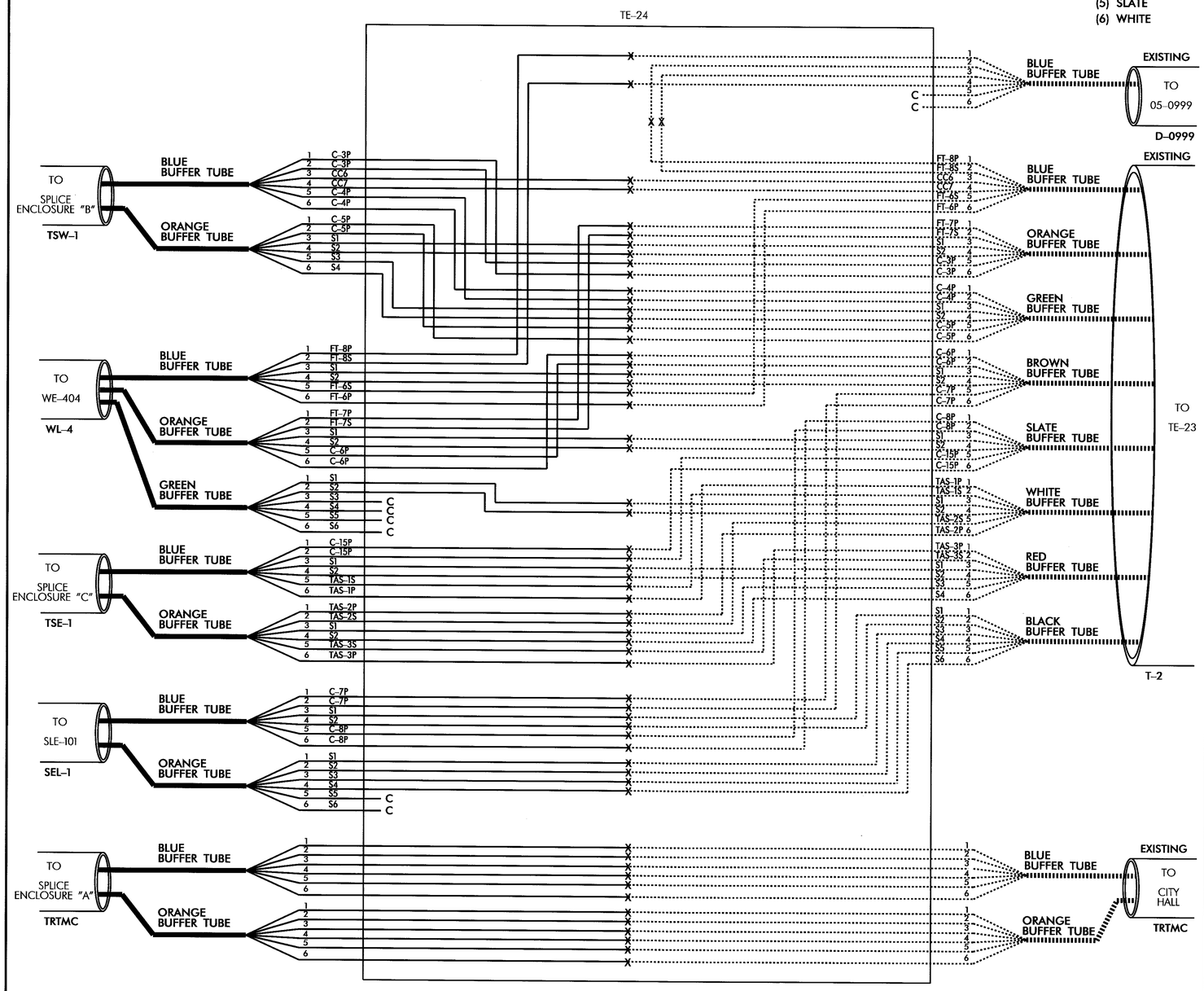

CONTRACTOR TO RECORD EXISTING SPLICE ARRANGEMENT FOR COMPARISON TO THE SUPPLIED SPLICE PLANS. IF DISCREPANCIES EXIST, CONTACT THE ENGINEER TO DETERMINE HOW TO PROCEED WITH RESPLICING.

ALL WORK IS NOT COMPLETE UNTIL THE SIGNAL SYSTEM IS BACK UP AND OPERATIONAL.

NOTES:

TRANSCEIVER TERMINATION CONFIGURATIONS ARE GENERIC. CONTRACTOR IS RESPONSIBLE FOR DETERMINING \ ENSURING PROPER TERMINATIONS.

NOTIFY THE CITY OF DURHAM'S TRANSPORTATION ENGINEER (PETE NICHOLAS @ 919 560-4366 EXT 36436) 24 HOURS PRIOR TO BEGINNING WORK ON SIGNAL SYSTEMS COMMUNICATION CABLE. NOTIFY THE CITY TRANSPORTATION ENGINEER AFTER ALL WORK IS PERFORMED TO ENSURE THAT ALL FIBER CIRCUITS ARE FUNCTIONING PROPERLY.

INCLUDE ON THE COVER OF EACH SPLICE TRAY THE FOLLOWING: REFERENCE SECTION 1731 "FIBER OPTIC SPLICE ENCLOSURE"

1) SPLICE LOCATION
2) DATE
3) COMPANY NAME
4) NAME OF INDIVIDUAL PERFORMING THE SPLICING

PRIOR TO INSTALLING THE COVER ON THE SPLICE TRAY TAKE A DIGITAL PHOTOGRAPH SHOWING THE SPLICE TRAY AND INFORMATION SHOWN ABOVE (1-4) AND SUBMIT PHOTOGRAPH ALONG WITH OTDR TEST RESULTS.

Prepared in the Offices of:
Transportation Mobility and Safety Division
Intelligent Transportation Systems Section
750 N. Greenfield Pkwy., Garner, NC 27529

SPLICE PLANS

DIVISION: 05 DURHAM CO. DURHAM
PLAN DATE: APRIL 2014 REVIEWED BY: I.N. AVERY
PREPARED BY: B.A. STOUCHKO REVIEWED BY: G.A. FULLER

REVISIONS	INIT.	DATE

SEAL
NORTH CAROLINA PROFESSIONAL SEAL 023919 ENGINEER GREGORY A. FULLER
SIGNATURE DATE 5-13-14
CADD Filename: